VSK_ETarget_ARDUINO 2560 Shield

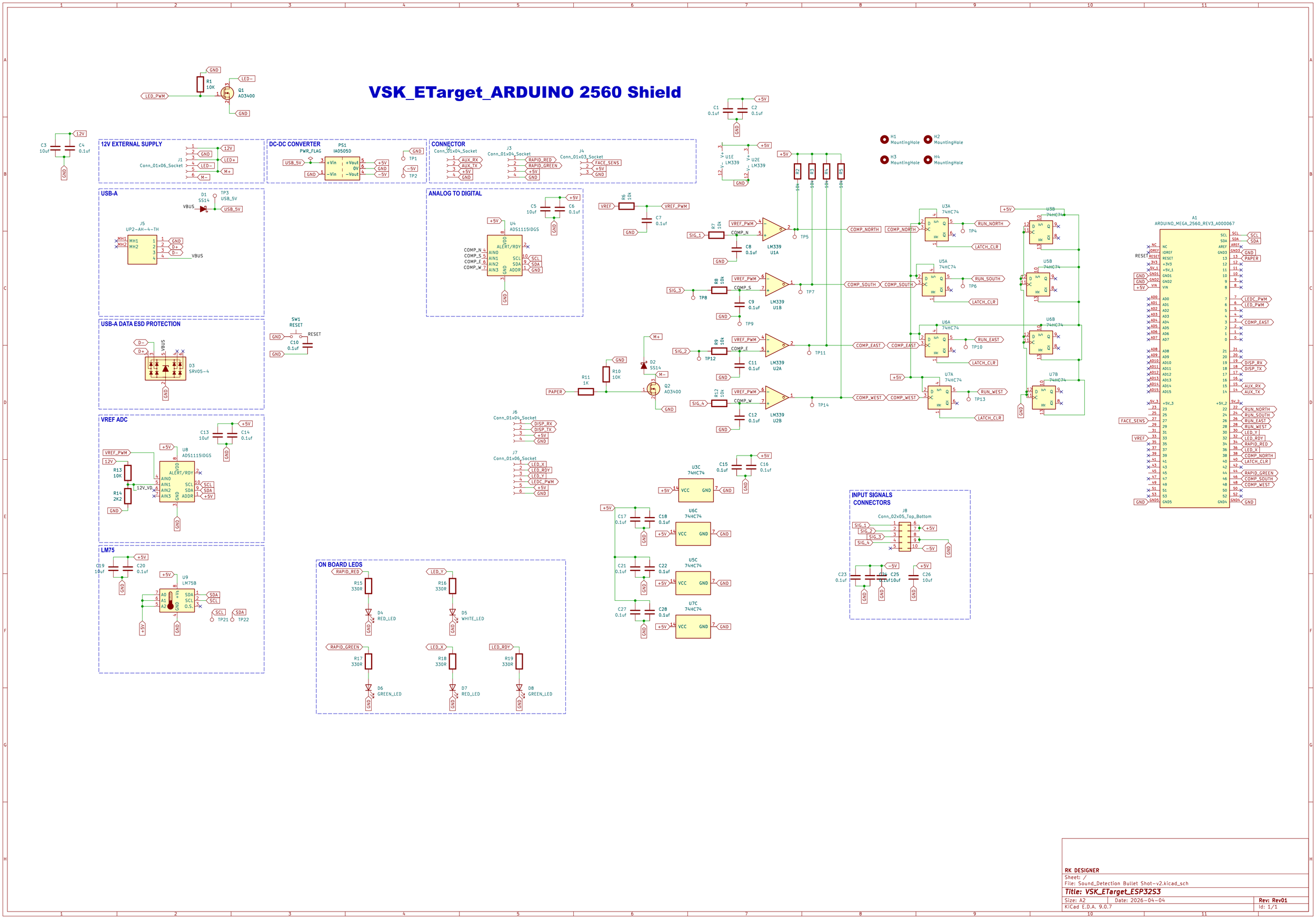

RK DESIGNER

Sheet: /

File: Sound_Detection Bullet Shot-v2.kicad_sch

Title: VSK_ETarget_ESP32S3

Size: A2	Date: 2026-04-04	Rev: Rev01
KiCad E.D.A. 9.0.7		Id: 1/1